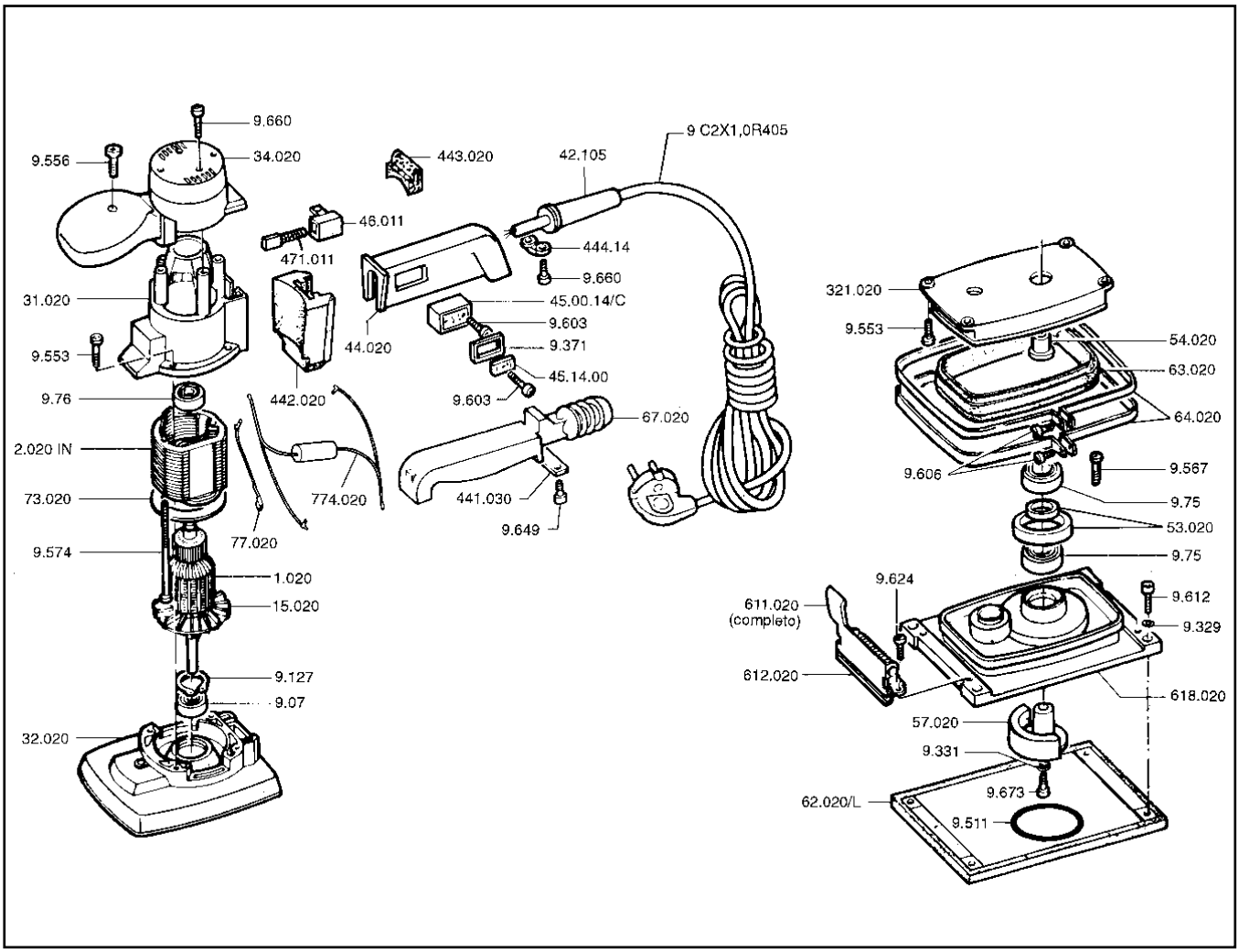
9.660
9.556
34.020
443.020
42.105
9 C2X1,0R405
46.011
471.011
444.14
9.660
31.020
45.00.14/C
9.603
9.553
44.020
9.371
45.14.00
9.76
442.020
9.603
67.020
2.020 IN
73.020
774.020
441.030
9.649
77.020
9.574
1.020
15.020
9.127
9.07
32.020
321.020
9.553
54.020
63.020
64.020
9.606
9.567
9.75
53.020
9.75
9.624
611.020
(completo)
9.612
9.329
612.020
618.020
57.020
9.331
9.673
62.020/L
9.511

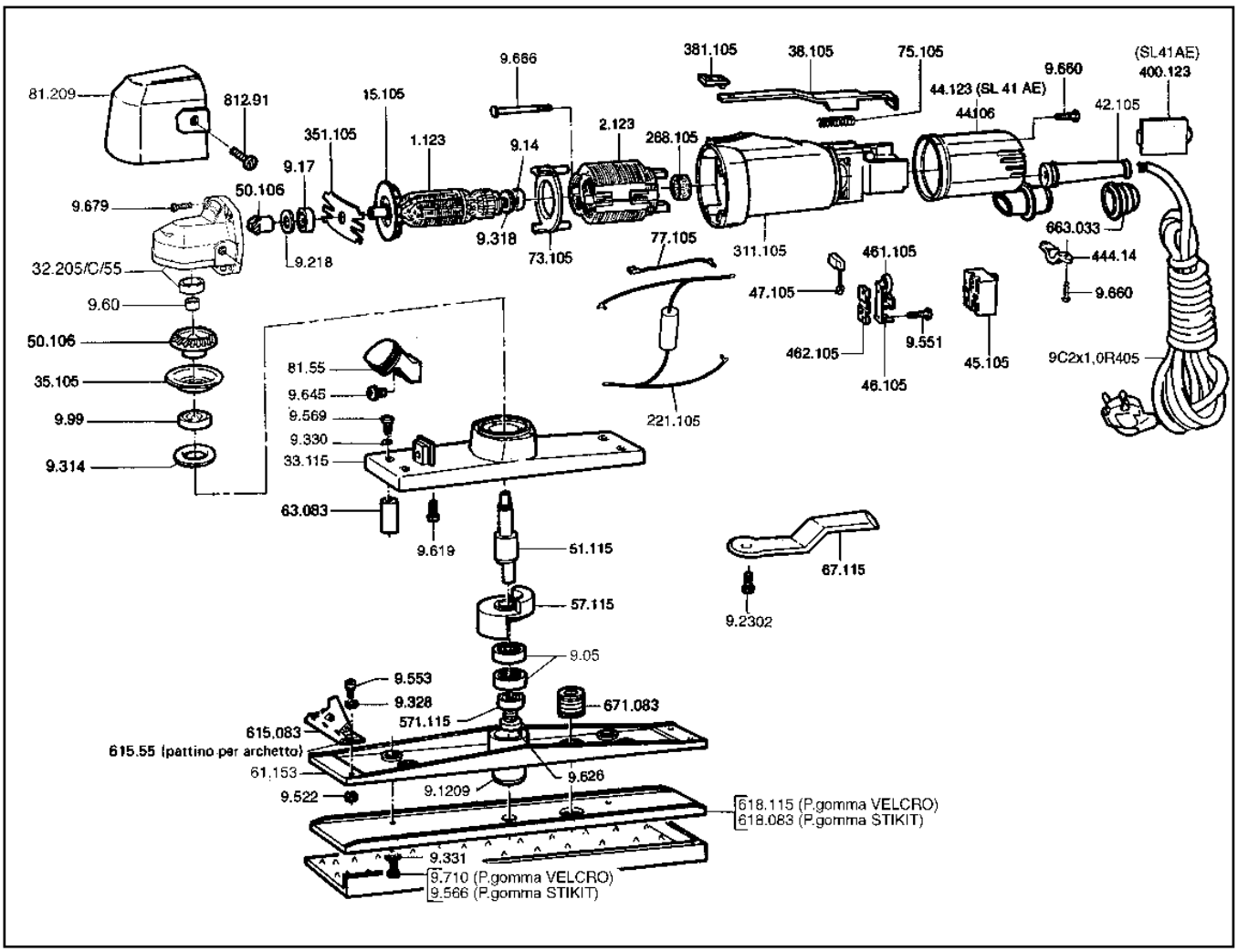
9.666
381.105
38.105
75.105
(SL41AE)
400.123
9.660
44.123 (SL 41 AE)
81.209
812.91
15.105
44.106
42.105
351.105
1.123
9.14
2.123
268.105
9.17
50.106
9.679
9.318
73.105
77.105
311.105
663.033
461.105
444.14
32.205/C/55
9.218
47.105
9.660
9.60
9.551
50.106
462.105
45.105
9C2x1,0R405
81.55
46.105
35.105
9.645
9.99
9.569
221.105
9.330
9.314
33.115
63.083
9.619
51.115
67.115
57.115
9.2302
9.05
9.553
9.328
671.083
571.115
615.083
615.55 (pattino per archetto)
61.153
9.626
9.522
9.1209
618.115 (P.gomma VELCRO)
618.083 (P.gomma STIKIT)
9.331
9.710 (P.gomma VELCRO)
9.566 (P.gomma STIKIT)